Mallory Sonalert Products,Inc.	Part #: ZT028LDMT3R
Sales Outline Drawing	Revision: **A**

Specifications:

Sound Level Category:	Loud	Loud	Loud	Loud
Sound Operation:	Continuous	Slow Pulse @ 1 PPS	Fast Pulse @ 10 PPS	Chime @ Once per 1 Second
Loudness @ 2 FT:	85 to 95 dB(A) Typ.	85 to 95 dB(A) Typ.	85 to 95 dB(A) Typ.	85 to 95 dB(A) Typ.
Frequency:	3900 ± 500 Hz	3900 ± 500 Hz	3900 ± 500 Hz	3900 ± 500 Hz
Lens Color:	Opaque White			
LED Color:	RED			
LED Operation:	Continuous	1 PPS	10 PPS	FADE @ 1 SEC
Voltage Rating:	16 to 28 VDC			
Current Draw:	40mA MAX	40mA MAX	40mA MAX	40mA MAX
Connection:	"+" to Positive, "-" to Ground	"+" to Positive, "-" and "1" to Ground	"+" to Positive, "-" and "2" to Ground	"+" to Positive, "-", "1" and "2" to Ground
Housing Material:	6/6 Nylon, Color: Black			
Front Cap Material:	6/6 Nylon, Color: Opaque White			
Storage Temperature:	-40° to +80° C			
Operating Temperature:	-30° to +65° C			
Panel Mounting:	Recommended hole size is 22.5 mm. Thread front will fit standard 22.5mm hole.			
Knurled Nut:	Used to attach part to panel. The max recommended torque is 10 in-lbs.			
Weight (Typical):	28 g			
NEMA 3R,4X, & 12:	Approved with use of included gasket.			
Options:	Please contact factory.			

Dimensions: Inches (mm)
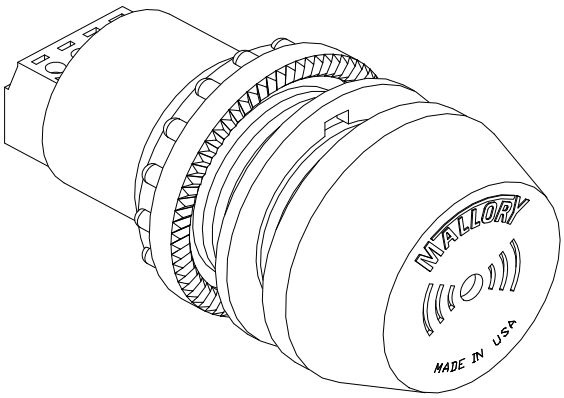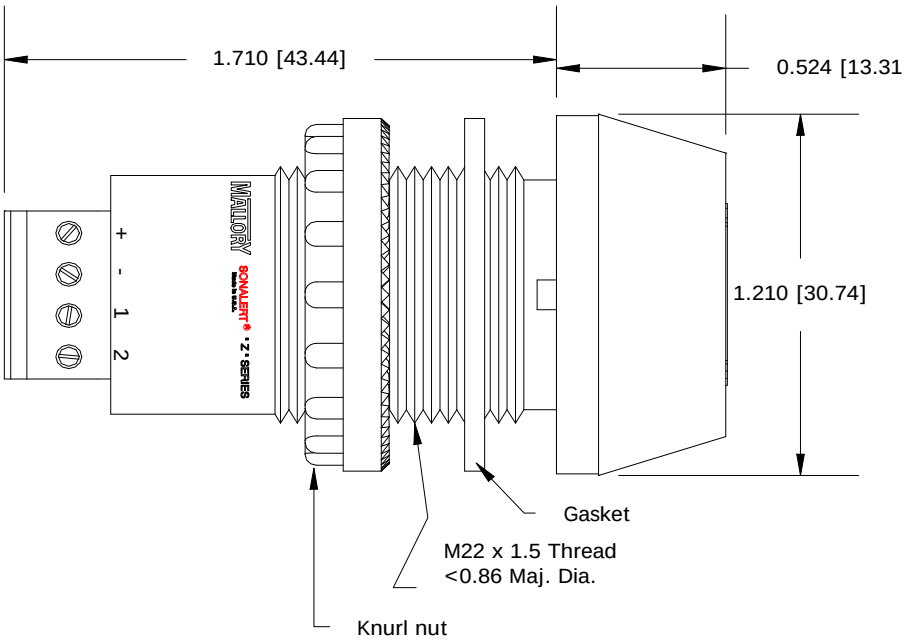
cUL Recognized **ROHS Compliant**